FAIRCHILD SEMICONDUCTOR®

HUF75332G3, HUF75332P3, HUF75332S3S

Data Sheet **December 2001**

60A, 55V, 0.019 Ohm, N-Channel UltraFET Power MOSFETs

These N-Channel power MOSFETs are manufactured using the innovative UltraFET® process. This advanced process technology achieves the lowest possible on-resistance per silicon area, resulting in outstanding performance. This device is capable of withstanding high energy in the avalanche mode and the diode exhibits very low reverse recovery time and stored charge. It was designed for use in applications where power efficiency is important, such as switching regulators, switching converters, motor drivers, relay drivers, low-voltage bus switches, and power management in portable and battery-operated products.

Formerly developmental type TA75332.

Ordering Information

PART NUMBER	PACKAGE	BRAND
HUF75332G3	TO-247	75332G
HUF75332P3	TO-220AB	75332P
HUF75332S3S	TO-263AB	75332S

NOTE: When ordering, use the entire part number. Add the suffix T to obtain the TO-263AB variant in tape and reel, e.g., HUF75332S3ST.

Packaging

JEDEC STYLE TO-247

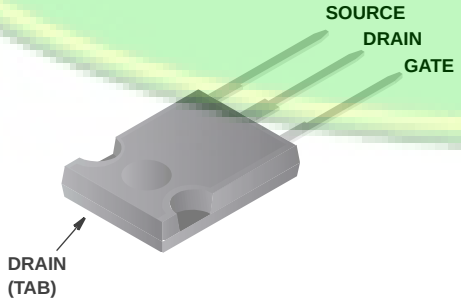

JEDEC TO-220AB

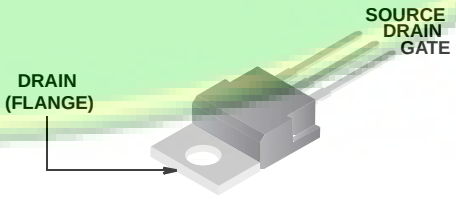

JEDEC TO-263AB

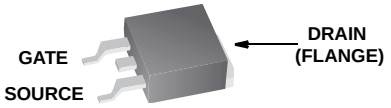

Features

- 60A, 55V
- Simulation Models
  - Temperature Compensated PSPICE® and SABER™ Models
  - SPICE and SABER Thermal Impedance Models Available on the WEB at: www.fairchildsemi.com
- Peak Current vs Pulse Width Curve
- UIS Rating Curve
- Related Literature
  - TB334, “Guidelines for Soldering Surface Mount Components to PC Boards”

Symbol

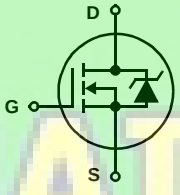

Product reliability information can be found at http://www.fairchildsemi.com/products/discrete/reliability/index.html
For severe environments, see our Automotive HUFA series.
All Fairchild semiconductor products are manufactured, assembled and tested under ISO9000 and QS9000 quality systems certification.

©2001 Fairchild Semiconductor Corporation

Absolute Maximum Ratings $T_C = 25^oC$, Unless Otherwise Specified

		UNITS
Drain to Source Voltage (Note 1) . . . . . V_{DSS}	55	V
Drain to Gate Voltage (R_{GS} = 20kΩ) (Note 1) . . . . . V_{DGR}	55	V
Gate to Source Voltage . . . . . V_{GS}	±20	V
Drain Current		
Continuous (Figure 2). . . . . I_D	60	A
Pulsed Drain Current . . . . . I_{DM}	Figure 4	
Pulsed Avalanche Rating. . . . . E_{AS}	Figure 6	
Power Dissipation . . . . . P_D	145	W
Derate Above 25^oC	0.97	$W/^oC$
Operating and Storage Temperature . . . . . T_J, T_{STG}	-55 to 175	^oC
Maximum Temperature for Soldering		
Leads at 0.063in (1.6mm) from Case for 10s. . . . . T_L	300	^oC
Package Body for 10s, See Techbrief 334 . . . . . T_{pkg}	260	^oC

CAUTION: Stresses above those listed in "Absolute Maximum Ratings" may cause permanent damage to the device. This is a stress only rating and operation of the device at these or any other conditions above those indicated in the operational sections of this specification is not implied.

NOTE:

1. $T_J = 25^oC$ to 150^oC.

Electrical Specifications $T_C = 25^oC$, Unless Otherwise Specified

PARAMETER	SYMBOL	TEST CONDITIONS		MIN	TYP	MAX	UNITS
OFF STATE SPECIFICATIONS							
Drain to Source Breakdown Voltage	BV_{DSS}	I_D = 250μA, V_{GS} = 0V (Figure 11)		55	-	-	V
Zero Gate Voltage Drain Current	I_{DSS}	V_{DS} = 50V, V_{GS} = 0V		-	-	1	μA
		V_{DS} = 45V, V_{GS} = 0V, $T_C = 150^oC$		-	-	250	μA
Gate to Source Leakage Current	I_{GSS}	V_{GS} = ±20V		-	-	±100	nA
ON STATE SPECIFICATIONS							
Gate to Source Threshold Voltage	$V_{GS(TH)}$	$V_{GS} = V_{DS}$, I_D = 250μA (Figure 10)		2	-	4	V
Drain to Source On Resistance	$r_{DS(ON)}$	I_D = 60A, V_{GS} = 10V (Figure 9)		-	0.016	0.019	Ω
THERMAL SPECIFICATIONS							
Thermal Resistance Junction to Case	$R_{\theta JC}$	(Figure 3)		-	-	1.03	$^oC/W$
Thermal Resistance Junction to Ambient	$R_{\theta JA}$	TO-247		-	-	30	$^oC/W$
		TO-220, TO-263		-	-	62	$^oC/W$
SWITCHING SPECIFICATIONS (V_{GS} = 10V)							
Turn-On Time	t_{ON}	V_{DD} = 30V, $I_D \cong$ 60A, R_L = 0.50Ω, V_{GS} = 10V, R_{GS} = 6.8Ω		-	-	100	ns
Turn-On Delay Time	$t_{d(ON)}$			-	12	-	ns
Rise Time	t_r			-	55	-	ns
Turn-Off Delay Time	$t_{d(OFF)}$			-	11	-	ns
Fall Time	t_f			-	25	-	ns
Turn-Off Time	t_{OFF}			-	-	55	ns
GATE CHARGE SPECIFICATIONS							
Total Gate Charge	$Q_{g(TOT)}$	V_{GS} = 0V to 20V	V_{DD} = 30V, $I_D \cong$ 60A, R_L = 0.50Ω $I_{g(REF)}$ = 1.0mA (Figure 13)	-	70	85	nC
Gate Charge at 10V	$Q_{g(10)}$	V_{GS} = 0V to 10V		-	40	50	nC
Threshold Gate Charge	$Q_{g(TH)}$	V_{GS} = 0V to 2V		-	2.5	3.0	nC
Gate to Source Gate Charge	Q_{gs}			-	6	-	nC
Reverse Transfer Capacitance	Q_{gd}			-	15	-	nC

SHANGHAI Electronics Group Co., Ltd

Electrical Specifications $T_C = 25^oC$, Unless Otherwise Specified

PARAMETER	SYMBOL	TEST CONDITIONS	MIN	TYP	MAX	UNITS
CAPACITANCE SPECIFICATIONS						
Input Capacitance	C_{ISS}	V_{DS} = 25V, V_{GS} = 0V, f = 1MHz (Figure 12)	-	1300	-	pF
Output Capacitance	C_{OSS}		-	480	-	pF
Reverse Transfer Capacitance	C_{RSS}		-	115	-	pF

Source to Drain Diode Specifications

PARAMETER	SYMBOL	TEST CONDITIONS	MIN	TYP	MAX	UNITS
Source to Drain Diode Voltage	V_{SD}	I_{SD} = 60A	-	-	1.25	V
Reverse Recovery Time	t_{rr}	I_{SD} = 60A, dI_{SD}/dt = 100A/µs	-	-	75	ns
Reverse Recovered Charge	Q_{RR}	I_{SD} = 60A, dI_{SD}/dt = 100A/µs	-	-	140	nC

Typical Performance Curves

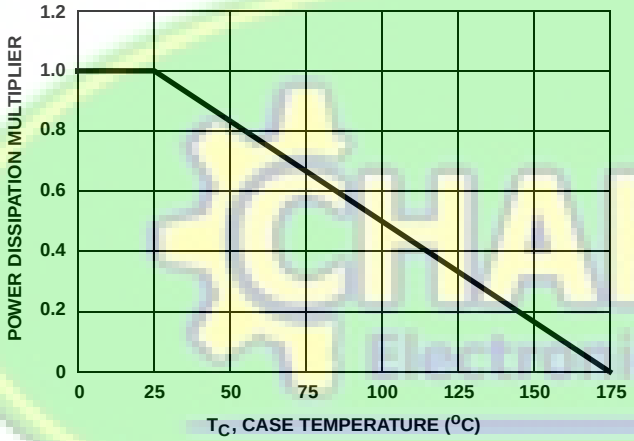

FIGURE 1. NORMALIZED POWER DISSIPATION vs CASE TEMPERATURE

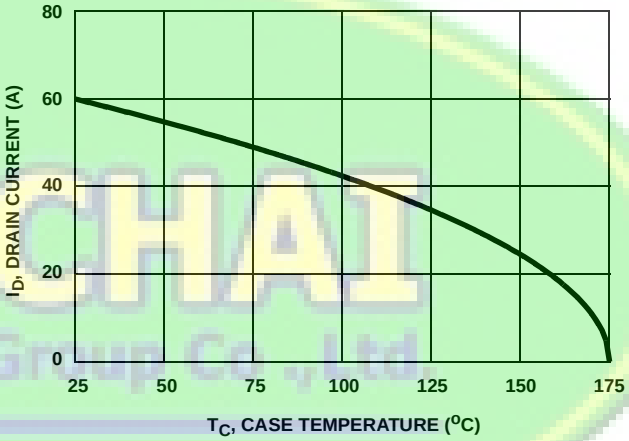

FIGURE 2. MAXIMUM CONTINUOUS DRAIN CURRENT vs CASE TEMPERATURE

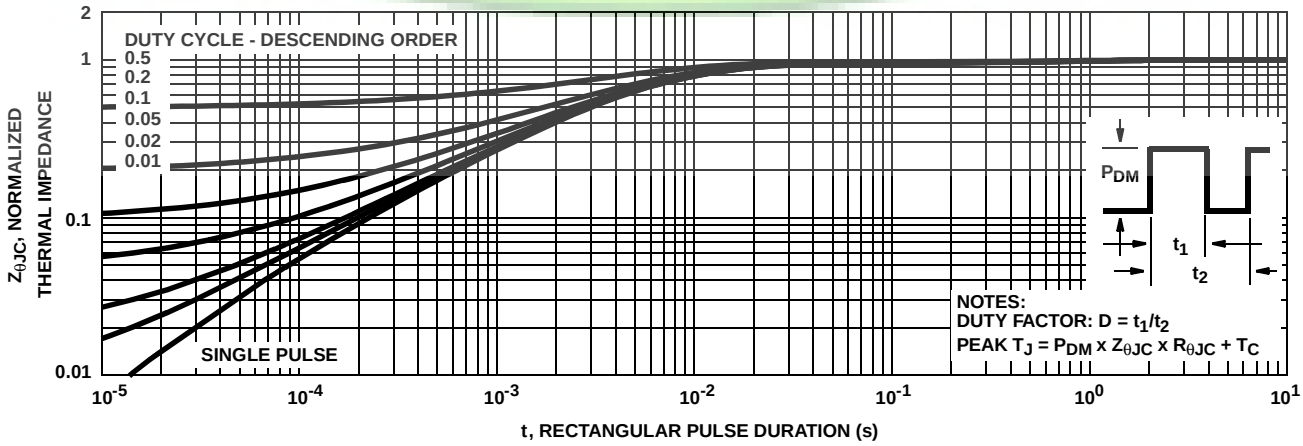

FIGURE 3. NORMALIZED MAXIMUM TRANSIENT THERMAL IMPEDANCE

CHAKCHAI Electronics Group Co., Ltd.

Typical Performance Curves (Continued)

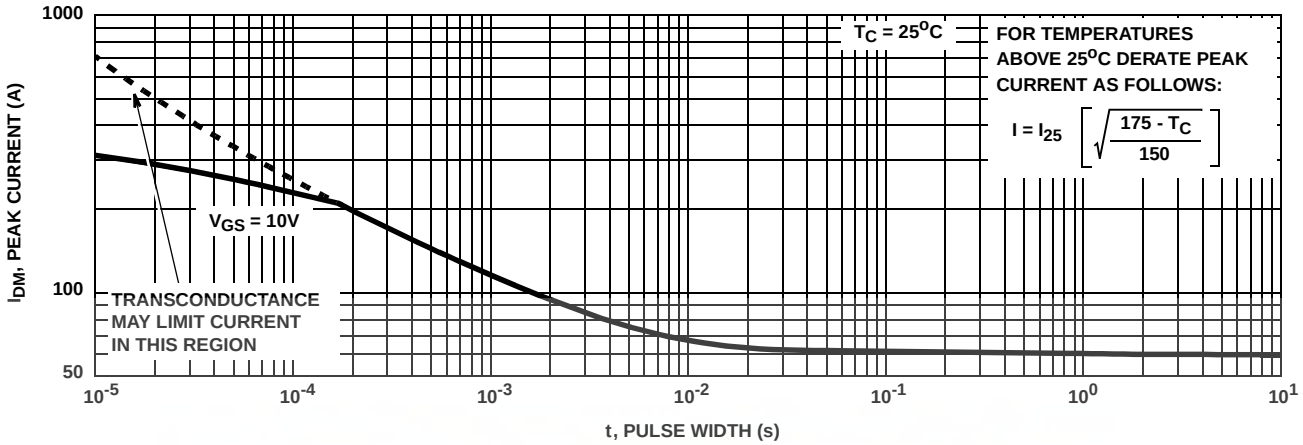

FIGURE 4. PEAK CURRENT CAPABILITY

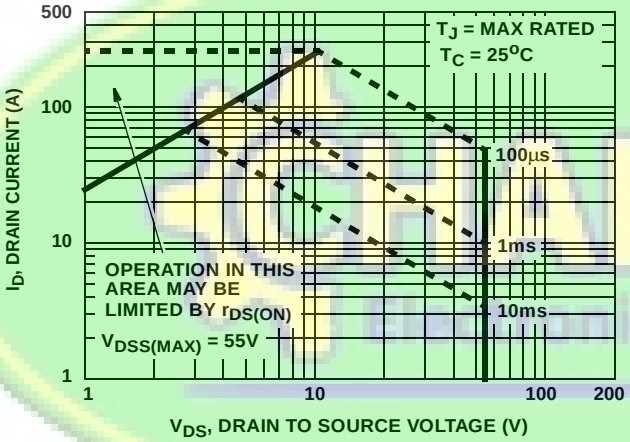

FIGURE 5. FORWARD BIAS SAFE OPERATING AREA

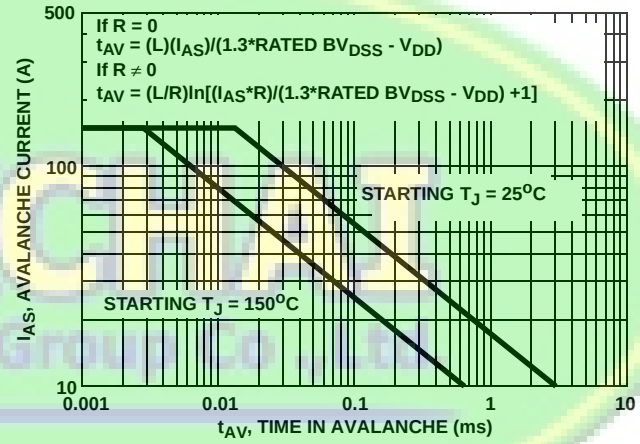

NOTE: Refer to Fairchild Application Notes AN9321 and AN9322.

FIGURE 6. UNCLAMPED INDUCTIVE SWITCHING CAPABILITY

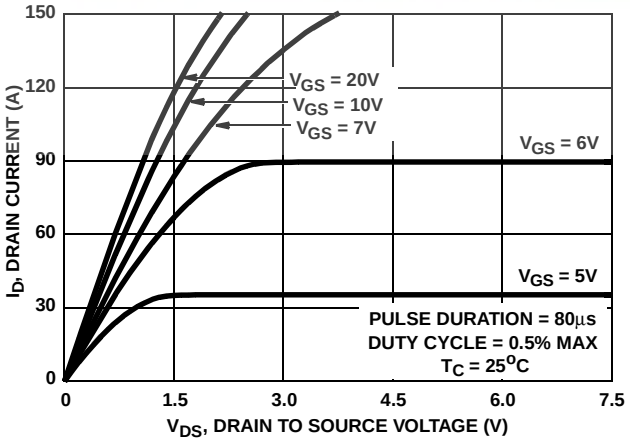

FIGURE 7. SATURATION CHARACTERISTICS

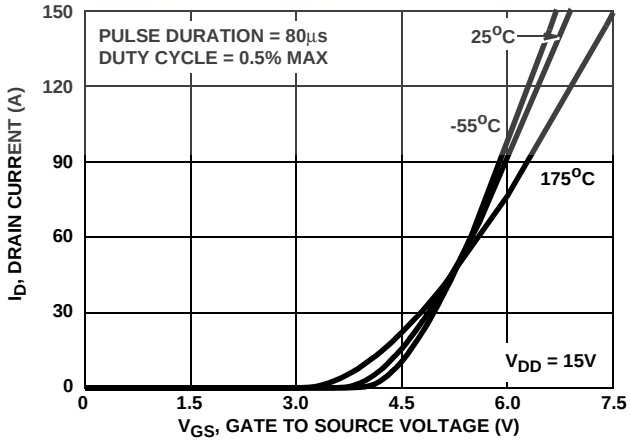

FIGURE 8. TRANSFER CHARACTERISTICS

Typical Performance Curves (Continued)

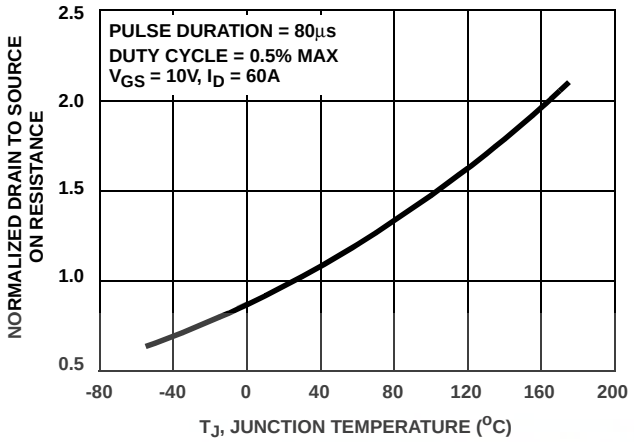

FIGURE 9. NORMALIZED DRAIN TO SOURCE ON RESISTANCE vs JUNCTION TEMPERATURE

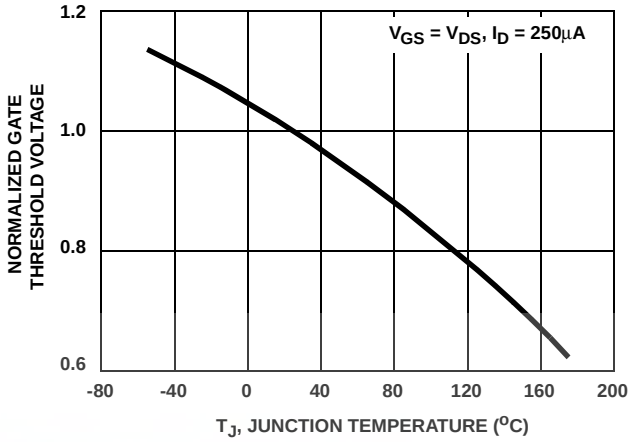

FIGURE 10. NORMALIZED GATE THRESHOLD VOLTAGE vs JUNCTION TEMPERATURE

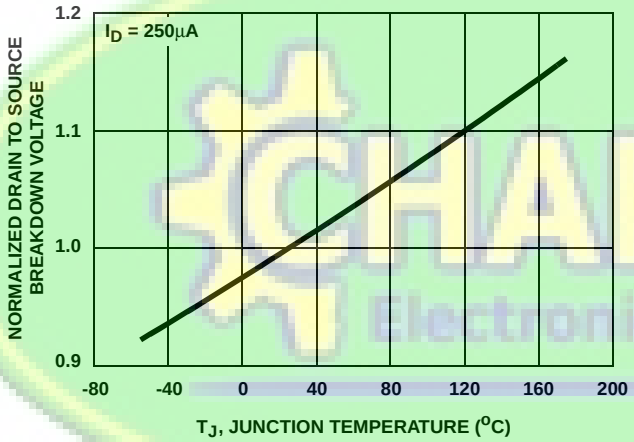

FIGURE 11. NORMALIZED DRAIN TO SOURCE BREAKDOWN VOLTAGE vs JUNCTION TEMPERATURE

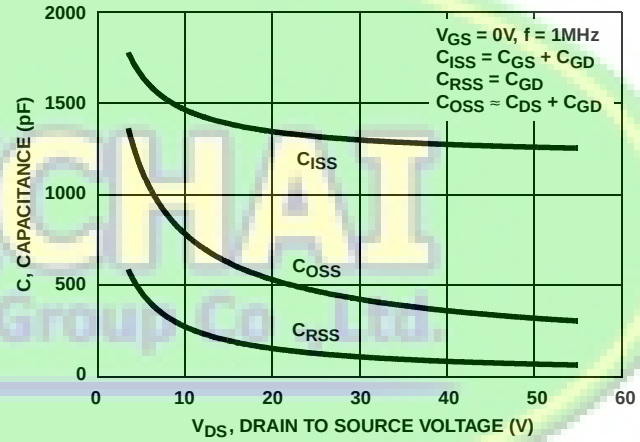

FIGURE 12. CAPACITANCE vs DRAIN TO SOURCE VOLTAGE

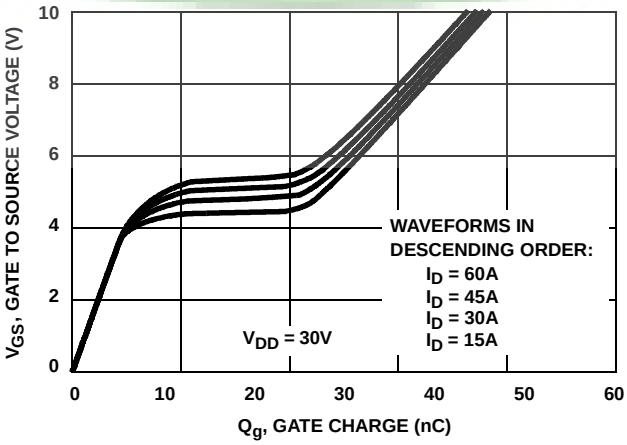

NOTE: Refer to Fairchild Application Notes AN7254 and AN7260.

FIGURE 13. GATE CHARGE WAVEFORMS FOR CONSTANT GATE CURRENT

CHAKCHAI Electronics Group Co. Ltd.

Test Circuits and Waveforms

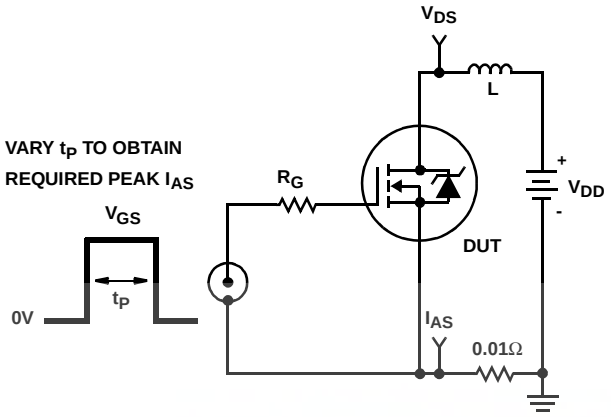

FIGURE 14. UNCLAMPED ENERGY TEST CIRCUIT

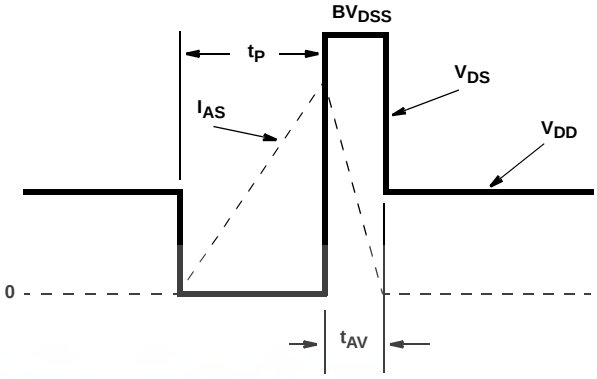

FIGURE 15. UNCLAMPED ENERGY WAVEFORMS

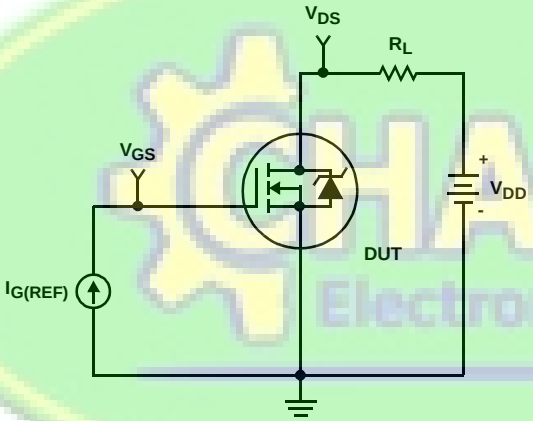

FIGURE 16. GATE CHARGE TEST CIRCUIT

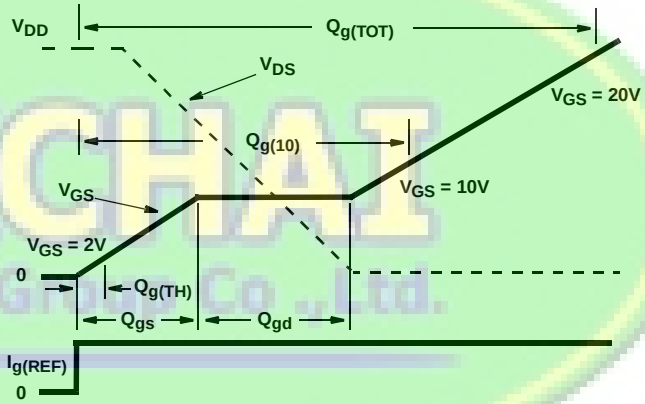

FIGURE 17. GATE CHARGE WAVEFORM

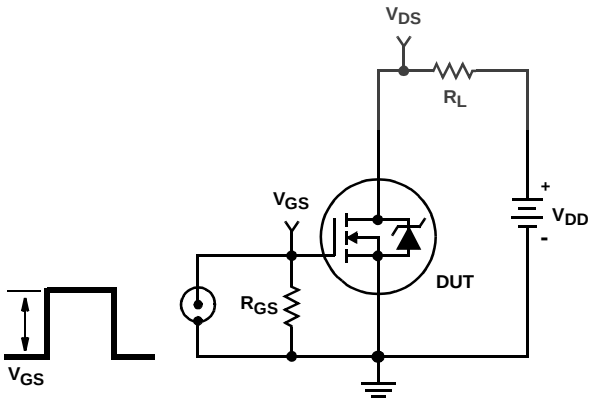

FIGURE 18. SWITCHING TIME TEST CIRCUIT

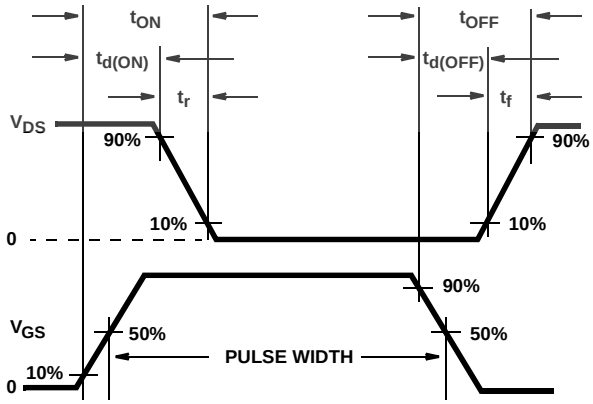

FIGURE 19. RESISTIVE SWITCHING WAVEFORMS

CHAKCHAI Electronics Group Co., Ltd.

PSPICE Electrical Model

.SUBCKT HUF75332 2 1 3 ; rev 17 February 1999

CA 12 8 1.8e-9
CB 15 14 1.73e-9
CIN 6 8 1.19e-9

DBODY 7 5 DBODYMOD
DBREAK 5 11 DBREAKMOD
DPLCAP 10 5 DPLCAPMOD

EBREAK 11 7 17 18 58.85
EDS 14 8 5 8 1
EGS 13 8 6 8 1
ESG 6 10 6 8 1
EVTHRES 6 21 19 8 1
EVTEMP 20 6 18 22 1

IT 8 17 1

LDRAIN 2 5 1e-9
LGATE 1 9 1e-9
LSOURCE 3 7 1e-9
K1 LSOURCE LGATE 0.0085

MMED 16 6 8 8 MMEDMOD
MSTRO 16 6 8 8 MSTROMOD
MWEAK 16 21 8 8 MWEAKMOD

RBREAK 17 18 RBREAKMOD 1
RDRAIN 50 16 RDRAINMOD 4.5e-3
RGATE 9 20 1.3
RLDRAIN 2 5 10
RLGATE 1 9 10
RLSOURCE 3 7 10
RSLC1 5 51 RSLCMOD 1e-6
RSLC2 5 50 1e3
RSOURCE 8 7 RSOURCEMOD 5.95e-3
RVTHRES 22 8 RVTHRESMOD 1
RVTEMP 18 19 RVTEMPMOD 1

S1A 6 12 13 8 S1AMOD
S1B 13 12 13 8 S1BMOD
S2A 6 15 14 13 S2AMOD
S2B 13 15 14 13 S2BMOD

VBAT 22 19 DC 1

ESLC 51 50 VALUE={(V(5,51)/ABS(V(5,51)))*(PWR(V(5,51)/(1e-6*180),4.6))}

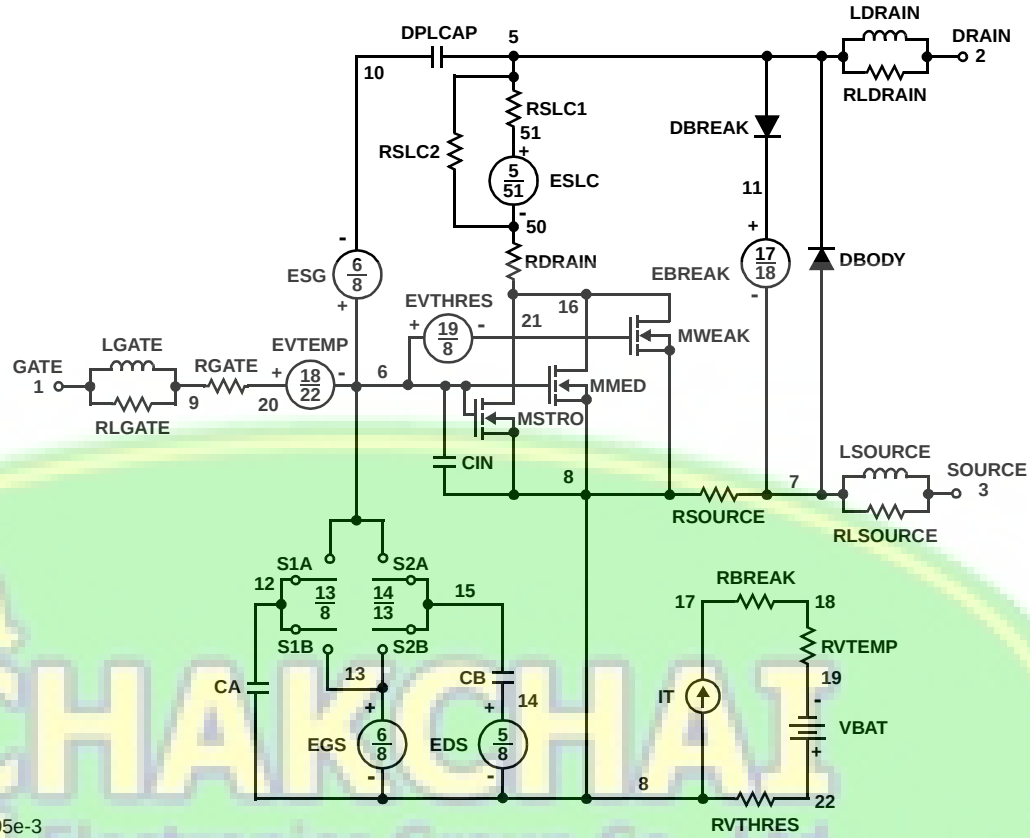

.MODEL DBODYMOD D (IS = 1.3e-12 RS = 3.0e-3 IKF = 20 XTI = 6 TRS1 = 2.7e-3 TRS2 = 7.0e-7 CJO = 1.7e-9 TT = 4.0e-8 M = 0.45 vj = 0.75)
.MODEL DBREAKMOD D (RS = 1.71e-2 IKF = 1.0e- 5TRS1 = -4.0e- 4TRS2 = -1.55e-5)
.MODEL DPLCAPMOD D (CJO = 1.8e- 9IS = 1e-30 N = 1 M = 0.9 vj = 1.45)
.MODEL MMEDMOD NMOS (VTO = 3.183 KP = 2 IS = 1e-30 N = 10 TOX = 1 L = 1u W = 1u RG = 1.3)
.MODEL MSTROMOD NMOS (VTO = 3.66 KP = 51.5 IS = 1e-30 N = 10 TOX = 1 L = 1u W = 1u)
.MODEL MWEAKMOD NMOS (VTO = 2.703 KP = 0.008 IS = 1e-30 N = 10 TOX = 1 L = 1u W = 1u RG = 13)
.MODEL RBREAKMOD RES (TC1 = 1.05e- 3TC2 = 4.5e-7)
.MODEL RDRAINMOD RES (TC1 = 1.16e-2 TC2 = 1.7e-5)
.MODEL RSLCMOD RES (TC1 = 3.96e-3 TC2 = 2.7e-6)
.MODEL RSOURCEMOD RES (TC1 = 1e-3 TC2 = 1e-5)
.MODEL RVTHRESMOD RES (TC1 = -2.8e-3 TC2 = -1.0e-5)
.MODEL RVTEMPMOD RES (TC1 = -2.75e- 3TC2 = 5.0e-7)

.MODEL S1AMOD VSWITCH (RON = 1e-5 ROFF = 0.1 VON = -8 VOFF= -3)
.MODEL S1BMOD VSWITCH (RON = 1e-5 ROFF = 0.1 VON = -3 VOFF= -8)
.MODEL S2AMOD VSWITCH (RON = 1e-5 ROFF = 0.1 VON = 0 VOFF= 0.5)
.MODEL S2BMOD VSWITCH (RON = 1e-5 ROFF = 0.1 VON = 0.5 VOFF= 0)

.ENDS

NOTE: For further discussion of the PSPICE model, consult **A New PSPICE Sub-Circuit for the Power MOSFET Featuring Global Temperature Options**; IEEE Power Electronics Specialist Conference Records, 1991, written by William J. Hepp and C. Frank Wheatley.

CHAKCHAI Electronics Group Co.,Ltd.

SABER Electrical Model

REV 17 February 1999

```
template huf75332 n2, n1, n3
electrical n2, n1, n3
{
var i iscl
d..model dbodymod = (is = 1.3e-12, xti = 6, cjo = 1.7e-9, tt = 4.0e-8, m = 0.45, vj = 0.75)
d..model dbreakmod = ()
d..model dplcapmod = (cjo = 1.8e-9, is = 1e-30, m = 0.9, vj = 1.45)
m..model mmedmod = (type=_n, vto = 3.183, kp = 2, is = 1e-30, tox = 1)
m..model mstrongmod = (type=_n, vto = 3.66, kp = 51.5, is = 1e-30, tox = 1)
m..model mweakmod = (type=_n, vto = 2.703, kp = 8.0e-3, is = 1e-30, tox = 1)
sw_vcsp..model s1amod = (ron = 1e-5, roff = 0.1, von = -8, voff = -3)
sw_vcsp..model s1bmod = (ron = 1e-5, roff = 0.1, von = -3, voff = -8)
sw_vcsp..model s2amod = (ron = 1e-5, roff = 0.1, von = 0, voff = 0.5)
sw_vcsp..model s2bmod = (ron = 1e-5, roff = 0.1, von = 0.5, voff = 0)

c.ca n12 n8 = 1.8e-9
c.cb n15 n14 = 1.73e-9
c.cin n6 n8 = 1.19e-9

d.dbody n7 n71 = model=dbodymod
d.dbreak n72 n11 = model=dbreakmod
d.dplcap n10 n5 = model=dplcapmod

i.it n8 n17 = 1

l.ldrain n2 n5 = 1.0e-9
l.lgate n1 n9 = 1.0e-9
l.lsource n3 n7 = 1.0e-9
k.kl i (l.lgate) i (l.lsource) = l (l.lgate), l (l.lsource), 0.0085

m.mmed n16 n6 n8 n8 = model=mmedmod, l = 1u, w = 1u
m.mstrong n16 n6 n8 n8 = model=mstrongmod, l = 1u, w = 1u
m.mweak n16 n21 n8 n8 = model=mweakmod, l = 1u, w = 1u

res.rbreak n17 n18 = 1, tc1 = 1.05e-3, tc2 = 4.5e-7
res.rdbody n71 n5 = 3.0e-3, tc1 = 2.7e-3, tc2 = 7.0e-7
res.rdbreak n72 n5 = 1.71e-2, tc1 = -4.0e-4, tc2 = -1.55e-5
res.rdrain n50 n16 = 4.5e-3, tc1 = 1.16e-2, tc2 = 1.7e-5
res.rgate n9 n20 = 1.3
res.rldrain n2 n5 = 10
res.rlgate n1 n9 = 10
res.rlsource n3 n7 = 10
res.rslc1 n5 n51 = 1e-6, tc1 = 3.96e-3, tc2 = 2.7e-6
res.rslc2 n5 n50 = 1e3
res.rsource n8 n7 = 5.95e-3, tc1 = 1e-3, tc2 = 1e-5
res.rvtemp n18 n19 = 1, tc1 = -2.75e-3, tc2 = 5.0e-7
res.rvthres n22 n8 = 1, tc1 = -2.8e-3, tc2 = -1.0e-5

spe.ebreak n11 n7 n17 n18 = 58.85
spe.eds n14 n8 n5 n8 = 1
spe.egs n13 n8 n6 n8 = 1
spe.esg n6 n10 n6 n8 = 1
spe.evtemp n20 n6 n18 n22 = 1
spe.evthres n6 n21 n19 n8 = 1

sw_vcsp.s1a n6 n12 n13 n8 = model=s1amod
sw_vcsp.s1b n13 n12 n13 n8 = model=s1bmod
sw_vcsp.s2a n6 n15 n14 n13 = model=s2amod
sw_vcsp.s2b n13 n15 n14 n13 = model=s2bmod

v.vbat n22 n19 = dc = 1

equations {
i (n51->n50) + = iscl
iscl: v(n51,n50) = ((v(n5,n51)/(1e-9+abs(v(n5,n51))))*((abs(v(n5,n51)*1e6/180))** 4.6))
}
}
```

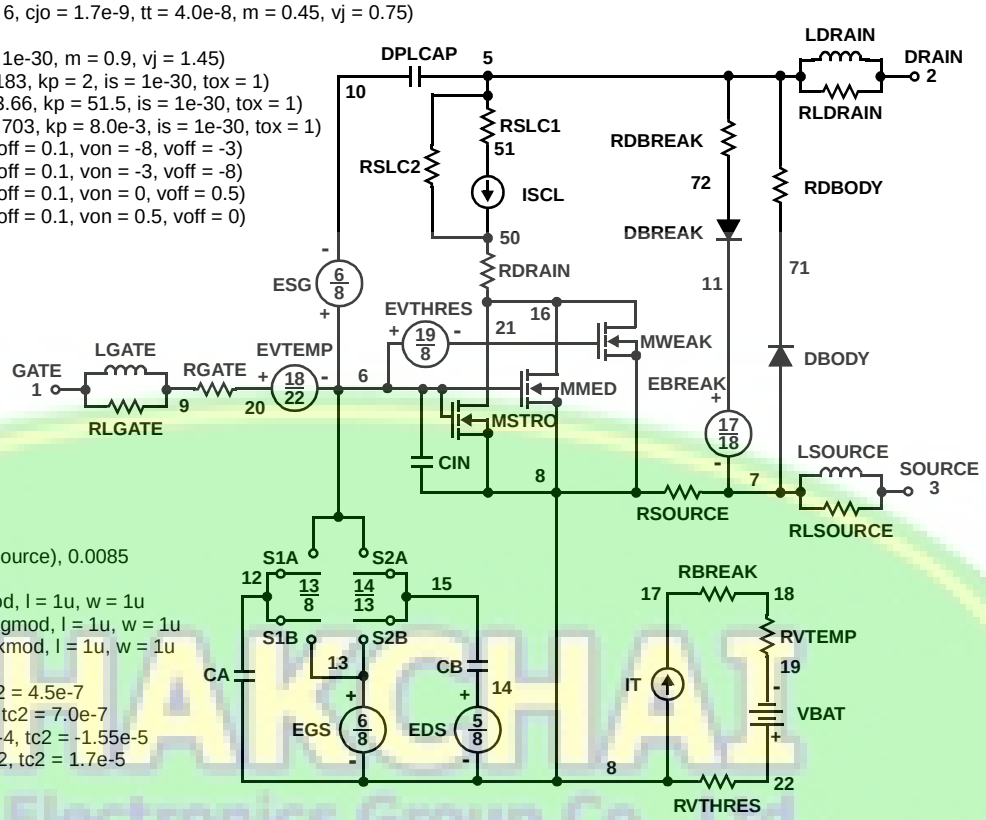

©2001 Fairchild Semiconductor Corporation

SPICE Thermal Model

REV 11February 1999

HUF75332

CTHERM1 th 6 4.00e-3
CTHERM2 6 5 7.00e-3
CTHERM3 5 4 7.50e-3
CTHERM4 4 3 8.00e-3
CTHERM5 3 2 1.85e-2
CTHERM6 2 tl 12.55

RTHERM1 th 6 7.09e-3
RTHERM2 6 5 1.77e-2
RTHERM3 5 4 4.97e-2
RTHERM4 4 3 2.79e-1
RTHERM5 3 2 4.21e-1
RTHERM6 2 tl 5.58e-2

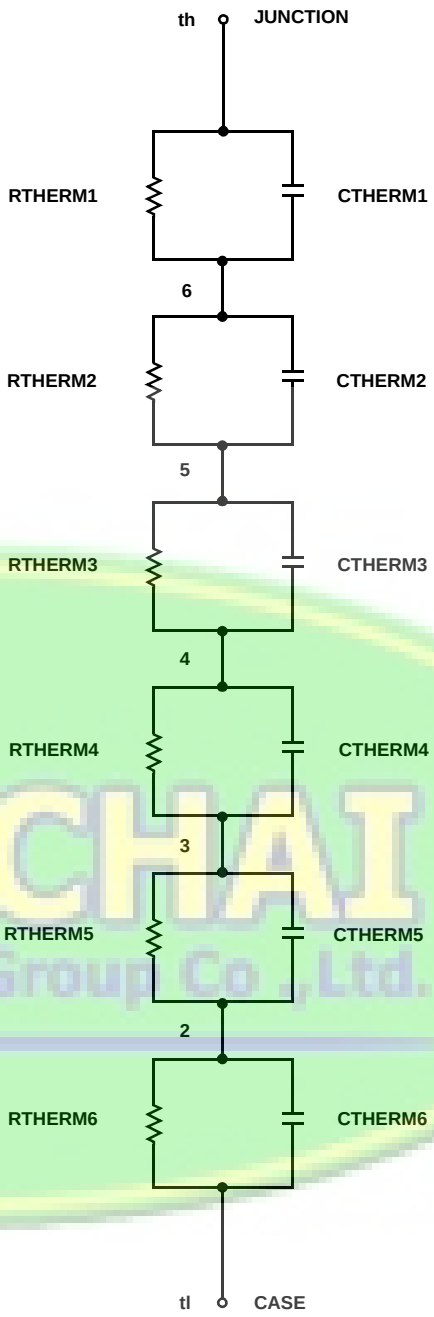

SABER Thermal Model

SABER thermal model HUF75332

```
template thermal_model th tl
thermal_c th, tl
{
ctherm.ctherm1 th 6 = 4.00e-3
ctherm.ctherm2 6 5 = 7.00e-3
ctherm.ctherm3 5 4 = 7.50e-3
ctherm.ctherm4 4 3 = 8.00e-3
ctherm.ctherm5 3 2 = 1.85e-2
ctherm.ctherm6 2 tl = 12.55

rtherm.rtherm1 th 6 = 7.09e-3
rtherm.rtherm2 6 5 = 1.77e-2
rtherm.rtherm3 5 4 = 4.97e-2
rtherm.rtherm4 4 3 = 2.79e-1
rtherm.rtherm5 3 2 = 4.21e-1
rtherm.rtherm6 2 tl = 5.58e-2
}
```

CHAKCHAI Electronics Group Co.,Ltd.

TRADEMARKS

The following are registered and unregistered trademarks Fairchild Semiconductor owns or is authorized to use and is not intended to be an exhaustive list of all such trademarks.

ACEx™	FAST ®	OPTOLOGIC™	SMART START™	VCX™
Bottomless™	FASTr™	OPTOPLANAR™	STAR*POWER™	
CoolFET™	FRFET™	PACMAN™	Stealth™	
CROSSVOLT™	GlobalOptoisolator™	POP™	SuperSOT™-3	
DenseTrench™	GTO™	Power247™	SuperSOT™-6	
DOME™	HiSeC™	PowerTrench®	SuperSOT™-8	
EcoSPARK™	ISOPLANAR™	QFET™	SyncFET™	
E^2CMOS™	LittleFET™	QS™	TinyLogic™	
EnSigna™	MicroFET™	QT Optoelectronics™	TruTranslation™	
FACT™	MicroPak™	Quiet Series™	UHC™	
FACT Quiet Series™	MICROWIRE™	SILENT SWITCHER®	UltraFET®	

STAR*POWER is used under license

DISCLAIMER

FAIRCHILD SEMICONDUCTOR RESERVES THE RIGHT TO MAKE CHANGES WITHOUT FURTHER NOTICE TO ANY PRODUCTS HEREIN TO IMPROVE RELIABILITY, FUNCTION OR DESIGN. FAIRCHILD DOES NOT ASSUME ANY LIABILITY ARISING OUT OF THE APPLICATION OR USE OF ANY PRODUCT OR CIRCUIT DESCRIBED HEREIN; NEITHER DOES IT CONVEY ANY LICENSE UNDER ITS PATENT RIGHTS, NOR THE RIGHTS OF OTHERS.

LIFE SUPPORT POLICY

FAIRCHILD'S PRODUCTS ARE NOT AUTHORIZED FOR USE AS CRITICAL COMPONENTS IN LIFE SUPPORT DEVICES OR SYSTEMS WITHOUT THE EXPRESS WRITTEN APPROVAL OF FAIRCHILD SEMICONDUCTOR CORPORATION.
As used herein:

1. Life support devices or systems are devices or systems which, (a) are intended for surgical implant into the body, or (b) support or sustain life, or (c) whose failure to perform when properly used in accordance with instructions for use provided in the labeling, can be reasonably expected to result in significant injury to the user.

2. A critical component is any component of a life support device or system whose failure to perform can be reasonably expected to cause the failure of the life support device or system, or to affect its safety or effectiveness.

PRODUCT STATUS DEFINITIONS

Definition of Terms

Datasheet Identification	Product Status	Definition
Advance Information	Formative or In Design	This datasheet contains the design specifications for product development. Specifications may change in any manner without notice.
Preliminary	First Production	This datasheet contains preliminary data, and supplementary data will be published at a later date. Fairchild Semiconductor reserves the right to make changes at any time without notice in order to improve design.
No Identification Needed	Full Production	This datasheet contains final specifications. Fairchild Semiconductor reserves the right to make changes at any time without notice in order to improve design.
Obsolete	Not In Production	This datasheet contains specifications on a product that has been discontinued by Fairchild semiconductor. The datasheet is printed for reference information only.

Rev. H4

SHANGHAI