Data Sheet | January 1999 | File Number 2936.4

Microprocessor-Compatible, 5-$^1/_2$ Digit A/D Converter

The Intersil HI-7159A is a monolithic A/D converter that uses a unique dual slope technique which allows it to resolve input changes as small as 1 part in 200,000 (10µV) without the use of critical external components. Its digital autozeroing feature virtually eliminates zero drift over temperature. The device is fabricated in Intersil' proprietary low noise BiMOS process, resulting in exceptional linearity and noise performance. The HI-7159A's resolution can be switched between a high resolution 200,000 count (5$^1/_2$ digit) mode, and a high speed 20,000 count (4$^1/_2$ digit) mode without any hardware modifications. In the 4$^1/_2$ digit uncompensated mode, speeds of 60 conversions per second can be achieved. The HI-7159A is designed to be easily interfaced with most microprocessors through either of its three serial and one parallel interface modes. In the serial modes, any one of four common baud rates is available.

Ordering Information

PART NUMBER	TEMP. RANGE (°C)	PACKAGE	PKG. NO.
HI3-7159A-5	0 to 70	28 Ld PDIP	E28.6

Features

- ±200,000 Count A/D Converter
- 2V Full Scale Reading With 10µV Resolution
- 15 Conversions Per Second in 5$^1/_2$ Digit Mode
- 60 Conversions Per Second in 4$^1/_2$ Digit Mode
- Serial or Parallel Interface Modes
- Four Selectable Baud Rates
- Differential Analog Input
- Differential Reference Input
- Digital Autozero

Applications

- Weigh Scales
- Part Counting Scales
- Laboratory Instruments
- Process Control/Monitoring
- Energy Management
- Seismic Monitoring

CHAKCHAI Electronics Group Co.,Ltd.

Pinout

HI-7159A
(PDIP)
TOP VIEW

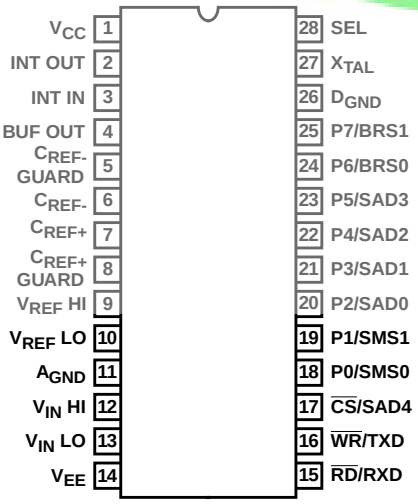

Functional Block Diagram

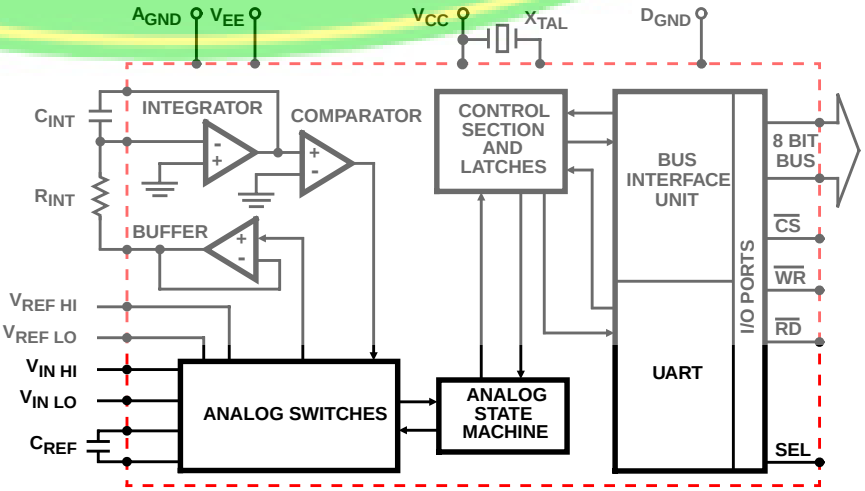

CAUTION: These devices are sensitive to electrostatic discharge; follow proper IC Handling Procedures.
1-888-INTERSIL or 321-724-7143 | Copyright © Intersil Corporation 1999

Absolute Maximum Ratings

Supply Voltage
- V_{CC} to GND (A_{GND}/D_{GND}) . . . . . -0.3V < V_{CC} < +6V
- V_{EE} to GND (A_{GND}/D_{GND}) . . . . . +0.3V < V_{CC} < -6V

Digital Pins, (pins 15 - 28) . . . . . D_{GND} -0.3V < V_D <V_{CC} +0.3V

Analog Pins, (pins 2 - 13). . . . . .V_{EE} -0.3V < V_A < V_{CC} +0.3V

Operating Conditions

Temperature Range . . . . . 0^oC to 70^oC

Thermal Information

Thermal Resistance (Typical, Note 1) θ_{JA} ($^oC/W$)
- PDIP Package 50

Maximum Junction Temperature . . . . . 150^oC

Maximum Storage Temperature, T_{STG} . . . . . -65^oC to 150^oC

Maximum Lead Temperature (Soldering 10s) . . . . . 300^oC

CAUTION: Stresses above those listed in "Absolute Maximum Ratings" may cause permanent damage to the device. This is a stress only rating and operation of the device at these or any other conditions above those indicated in the operational sections of this specification is not implied.

NOTE:

1. θ_{JA} is measured with the component mounted on an evaluation PC board in free air.

Electrical Specifications

Test Conditions: V_{CC} = +5V, V_{EE} = -5V, D_{GND} = 0V, A_{GND} = 0V, $V_{REF\ HI}$ = +1.00000V, $V_{REF\ LO}$ = AGND, f_{CLOCK} = 2.40MHz, R_{INT} = 400kΩ, C_{INT} = 0.01µF, T_A = 25^oC, $V_{IN\ LO}$ = A_{GND}, C_{REF} = 1.0µF, $5^1/_2$ Digit Compensated Mode, Unless Otherwise Specified

PARAMETER	TEST CONDITIONS	MIN	TYP	MAX	UNITS
Integral Non-Linearity, INL	0V to +2V (Notes 2, 3, 4, 5)	-	±0.0015	±0.0035	% FS
	-2V to 0V (Notes 2, 3, 4, 5)	-	±0.0015	±0.0035	% FS
Ratiometric Reading	$V_{IN\ HI}$ = $V_{REF\ HI}$ = 1.00000V	99996	100000	100003	Counts
Zero Error, ZE	$V_{IN\ HI}$ = 0.00000V	-	0	±1	Counts
Voltage Range of $V_{IN\ LO}$ Input (Pin 13), $V_{IN\ LO}$	-2V ≤ $V_{IN\ HI}$ - $V_{IN\ LO}$ ≤ 2V	-1	-	1	V
Voltage Range of $V_{IN\ HI}$ Input (Pin 12), $V_{IN\ HI}$	-2V ≤ $V_{IN\ HI}$ - $V_{IN\ LO}$ ≤ 2V	$V_{IN\ LO}$-2V	-	$V_{IN\ LO}$ +2V	V
Common Mode Rejection, CMR	$V_{IN\ HI}$ = $V_{IN\ LO}$ = -3V to +3V	-	3	-	Counts
Input Leakage Current, I_{IN}	Pins 9, 10, 12, 13, V_{IN} = +3V, -3V	-	-	±0.1	µA
Input Capacitance, C_{IN}	Pins 9, 10, 12, 13	-	5	-	pF
Noise (Peak-to-Peak Value, Not Exceeded 95% of Time), e_N		-	±1	-	Counts
Zero Drift, $T_{C(ZE)}$	$V_{IN\ HI}$ = 0.00000V	-	0	-	Counts/^oC
Full Scale Error Tempco, $T_{C(FSE)}$	$V_{IN\ HI}$ = ±2.00000V	-	±0.1	-	Counts/^oC
Supply Range, V_{SUPPLY}					
V_{CC}		+4.75	+5.0	+5.5	V
V_{EE}		-4.75	-5.0	-5.5	V
V_{CC} Supply Current, I_{CC}		-	-	10	mA
V_{EE} Supply Current, I_{EE}		-	-	4.5	mA
Digital GND Current, I_{DGND}		-	-	5.5	mA
Analog GND Current, I_{AGND}		-	+3	-	µA
V_{CC}, V_{EE} Power Supply Rejection, PSR	$V_{IN\ HI}$ = $V_{REF\ HI}$ = 1.00000V, V_{CC} = +4.75V, V_{EE} = -4.75V to V_{CC} = +5.50V, V_{EE} = -5.50V	-	3	-	Counts
Guard Driver Pins 5, 8 Output Current, I_{OGD}	V_{IN} (Pins 9, 10) = +3V, -3V	±10	-	-	µA

NOTES:

2. All typical values have been characterized but are not production tested.
3. Not production tested, guaranteed by design and characterization.
4. Reference adjusted for correct full-scale reading.
5. V_{IN} = $V_{IN\ HI}$ - $V_{IN\ LO}$.

CHAKCHAI Electronics Group Co.,Ltd.

DC Electrical Specifications

Test Conditions: V_{CC} = +5V, V_{EE} = -5V, D_{GND} = 0V, A_{GND} = 0V, $V_{REF\ HI}$ = +1.00000V, $V_{REF\ LO}$ = A_{GND}, f_{CLOCK} = 2.40MHz, R_{INT} = 400kΩ, C_{INT} = 0.01µF, T_A = 25°C, $V_{IN\ LO}$ = A_{GND}, C_{REF} = 1.0µF, $5^1/_2$ Digit Compensated Mode, Unless Otherwise Specified

PARAMETER	TEST CONDITIONS	MIN	TYP	MAX	UNITS
Input Low Voltage, V_{IL}	Pins 15-25, 28	-	-	0.8	V
Input High Voltage, V_{IH}	Pins 15-25, 28	2.0	-	-	V
Output Low Voltage, V_{OL}	Pins 16, 18-25, I_{OL} = 1.6mA	-	-	0.4	V
Output High Voltage, V_{OH}	Pins 16, 18-25, I_{OH} = -400µA	2.4	-	-	V
Three-State Leakage Current, Pins 18-25, I_{OL}	All Digital Drivers In High Impedance State, Parallel Mode. CS = V_{CC}, V_{IN} = 0V, V_{CC}	-	-	±10	µA
Leakage, Pins 15-17, 28, I_{IN}	V_{IN} = 0V, V_{CC}	-	-	±1	µA
Input Capacitance, C_{IN}	Pins 15, 17-25, 28	-	5	-	pF
	Pin 16	-	10	-	pF
Input Pullup Current (Pins 18-25), I_{PU}	Pins 18-25 at D_{GND} SEL = D_{GND} (Serial Modes)	-	-5	-	µA

AC Electrical Specifications

T_A = 0°C to 75°C; Test Conditions: V_{CC} = +4.75V, V_{EE} = -5.00V (Note 8), D_{GND} = 0V, A_{GND} = 0V, $V_{IN\ LO}$ = A_{GND}, $V_{REF\ HI}$ = +1.00000V, $V_{REF\ LO}$ = A_{GND}, f_{CLOCK} = 2.40MHz, R_{INT} = 400kΩ, C_{INT} = 0.01µF, V_{IL} = 0V, V_{IH} = 4V, V_{OL} = V_{OH} = 1.5V, t_r = t_f < 10ns, $5^1/_2$ Digit Compensated Mode, Unless Otherwise Specified

PARAMETER	TEST CONDITIONS	MIN	TYP	MAX	UNITS
$\overline{CS}$ Setup/Hold of $\overline{WR}$, t_1		0	-	-	ns
$\overline{WR}$ Setup of Data In, t_2		50	-	-	ns
$\overline{WR}$ Pulse Width, t_3		150	-	-	ns
Data Hold After $\overline{WR}$, t_4		20	-	-	ns
$\overline{CS}$ Setup/Hold of $\overline{RD}$, t_5	(Note 7)	25	-	-	ns
$\overline{RD}$ to Data Out, t_6	C_L = 50pF, V_O = 1.5V	-	-	100	ns
$\overline{RD}$ to Hi-Z State, t_7		-	-	70	ns
$\overline{WR}$ to $\overline{RD}$, $\overline{WR}$ to $\overline{WR}$, t_A	(Note 7)	$5/f_{CLOCK}$	-	-	s
$\overline{RD}$ to $\overline{WR}$, t_B	(Note 7)	200	-	-	ns
RXD Setup of Data In, t_C	(Note 7)	60	-	-	ns
Data Hold After EXT CLK, t_D		40	-	-	ns
EXT CLK to DATA OUT, t_E		-	-	300	ns
$\overline{CS}$ Setup of TXD, t_f		100	-	-	ns

NOTES:

6. All typical values have been characterized but are not production tested.
7. Not production tested, guaranteed by design and characterization.
8. All AC characteristics are guaranteed for V_{CC} = +5V 15%, V_{EE} = -5V 15%, over T_A = 0°C to 75°C.

CHAKCHAI Electronics Group Co.,Ltd.