N-channel TrenchMOS™ transistor

PHP18NQ10T, PHB18NQ10T PHD18NQ10T

FEATURES

- **'Trench'** technology
- Low on-state resistance
- Fast switching
- Low thermal resistance

SYMBOL

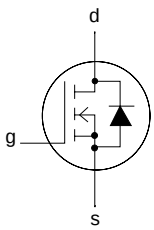

QUICK REFERENCE DATA

V_{DSS} = 100 V

I_D = 18 A

$R_{DS(ON)} \leq 90\ m\Omega$

GENERAL DESCRIPTION

N-channel enhancement mode field-effect power transistor in a plastic envelope using '**trench**' technology.

Applications:-
- d.c. to d.c. converters
- switched mode power supplies

The PHP18NQ10T is supplied in the SOT78 (TO220AB) conventional leaded package.
The PHB18NQ10T is supplied in the SOT404 (D^2PAK) surface mounting package.
The PHD18NQ10T is supplied in the SOT428 (DPAK) surface mounting package.

PINNING

PIN	DESCRIPTION
1	gate
2	drain [1]
3	source
tab	drain

SOT78 (TO220AB)

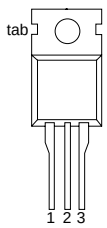

SOT404 (D^2PAK)

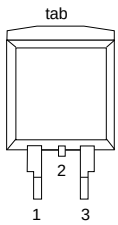

SOT428 (DPAK)

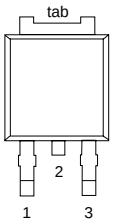

LIMITING VALUES

Limiting values in accordance with the Absolute Maximum System (IEC 134)

SYMBOL	PARAMETER	CONDITIONS	MIN.	MAX.	UNIT
V_{DSS}	Drain-source voltage	T_j = 25 ˚C to 175˚C	-	100	V
V_{DGR}	Drain-gate voltage	T_j = 25 ˚C to 175˚C; R_{GS} = 20 kΩ	-	100	V
V_{GS}	Gate-source voltage		-	± 20	V
I_D	Continuous drain current	T_{mb} = 25 ˚C; V_{GS} = 10 V	-	18	A
		T_{mb} = 100 ˚C; V_{GS} = 10 V	-	13	A
I_{DM}	Pulsed drain current	T_{mb} = 25 ˚C	-	72	A
P_D	Total power dissipation	T_{mb} = 25 ˚C	-	79	W
T_j, T_{stg}	Operating junction and storage temperature		- 55	175	˚C

1 It is not possible to make connection to pin:2 of the SOT404 or SOT428 packages.

AVALANCHE ENERGY LIMITING VALUES

Limiting values in accordance with the Absolute Maximum System (IEC 134)

SYMBOL	PARAMETER	CONDITIONS	MIN.	MAX.	UNIT
E_{AS}	Non-repetitive avalanche energy	Unclamped inductive load, I_{AS} = 11 A; t_p = 100 µs; T_j prior to avalanche = 25˚C; $V_{DD} \leq$ 25 V; R_{GS} = 50 Ω; V_{GS} = 10 V; refer to fig:15	-	70	mJ
I_{AS}	Peak non-repetitive avalanche current		-	18	A

THERMAL RESISTANCES

SYMBOL	PARAMETER	CONDITIONS	MIN.	TYP.	MAX.	UNIT
$R_{th\ j\text{-}mb}$	Thermal resistance junction to mounting base		-	-	1.9	K/W
$R_{th\ j\text{-}a}$	Thermal resistance junction to ambient	SOT78 package, in free air	-	60	-	K/W
		SOT404 & SOT428 packages, pcb mounted, minimum footprint	-	50	-	K/W

ELECTRICAL CHARACTERISTICS

T_j= 25˚C unless otherwise specified

SYMBOL	PARAMETER	CONDITIONS	MIN.	TYP.	MAX.	UNIT
$V_{(BR)DSS}$	Drain-source breakdown voltage	V_{GS} = 0 V; I_D = 0.25 mA;	100	-	-	V
		T_j = -55˚C	89	-	-	V
$V_{GS(TO)}$	Gate threshold voltage	V_{DS} = V_{GS}; I_D = 1 mA	2	3	4	V
		T_j = 175˚C	1	-	-	V
		T_j = -55˚C	-		6	V
$R_{DS(ON)}$	Drain-source on-state resistance	V_{GS} = 10 V; I_D = 9 A	-	80	90	mΩ
		T_j = 175˚C	-	-	243	mΩ
I_{GSS}	Gate source leakage current	V_{GS} = ± 10 V; V_{DS} = 0 V	-	10	100	nA
I_{DSS}	Zero gate voltage drain current	V_{DS} = 100 V; V_{GS} = 0 V	-	0.05	10	µA
		T_j = 175˚C	-	-	500	µA
$Q_{g(tot)}$	Total gate charge	I_D = 18 A; V_{DD} = 80 V; V_{GS} = 10 V	-	21	-	nC
Q_{gs}	Gate-source charge		-	4	-	nC
Q_{gd}	Gate-drain (Miller) charge		-	8	-	nC
$t_{d\ on}$	Turn-on delay time	V_{DD} = 50 V; R_D = 2.7 Ω;	-	6	-	ns
t_r	Turn-on rise time	V_{GS} = 10 V; R_G = 5.6 Ω	-	36	-	ns
$t_{d\ off}$	Turn-off delay time	Resistive load	-	18	-	ns
t_f	Turn-off fall time		-	12	-	ns
L_d	Internal drain inductance	Measured tab to centre of die	-	3.5	-	nH
L_d	Internal drain inductance	Measured from drain lead to centre of die (SOT78 package only)	-	4.5	-	nH
L_s	Internal source inductance	Measured from source lead to source bond pad	-	7.5	-	nH
C_{iss}	Input capacitance	V_{GS} = 0 V; V_{DS} = 25 V; f = 1 MHz	-	633	-	pF
C_{oss}	Output capacitance		-	103	-	pF
C_{rss}	Feedback capacitance		-	61	-	pF

REVERSE DIODE LIMITING VALUES AND CHARACTERISTICS

T_j = 25˚C unless otherwise specified

SYMBOL	PARAMETER	CONDITIONS	MIN.	TYP.	MAX.	UNIT
I_S	Continuous source current (body diode)		-	-	18	A
I_{SM}	Pulsed source current (body diode)		-	-	72	A
V_{SD}	Diode forward voltage	I_F = 18 A; V_{GS} = 0 V	-	0.92	1.2	V
t_{rr}	Reverse recovery time	I_F = 18 A; $-dI_F/dt$ = 100 A/µs;	-	55	-	ns
Q_{rr}	Reverse recovery charge	V_{GS} = 0 V; V_R = 25 V	-	135	-	nC

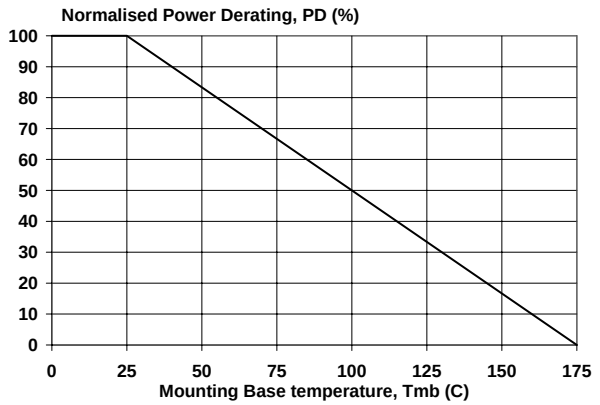

Fig.1. Normalised power dissipation.
$PD\% = 100 \cdot P_D/P_{D\ 25\ ^\circ C} = f(T_{mb})$

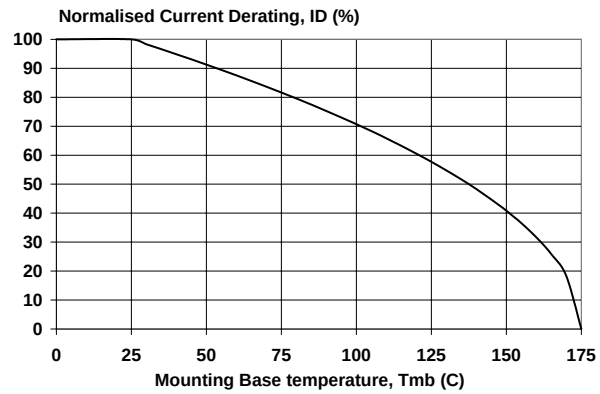

Fig.2. Normalised continuous drain current.
$ID\% = 100 \cdot I_D/I_{D\ 25\ ^\circ C} = f(T_{mb})$; conditions: $V_{GS} \geq 10$ V

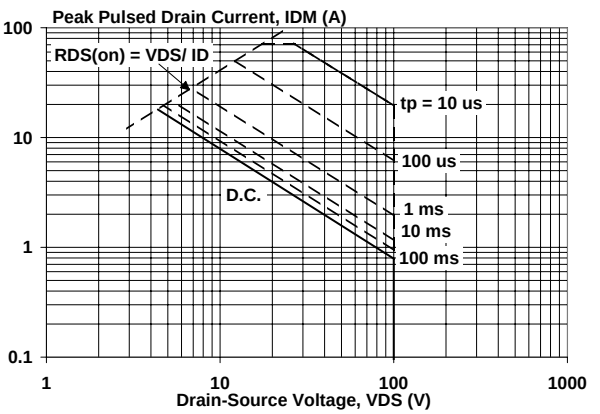

Fig.3. Safe operating area. $T_{mb} = 25\ ^\circ C$
I_D & $I_{DM} = f(V_{DS})$; I_{DM} single pulse; parameter t_p

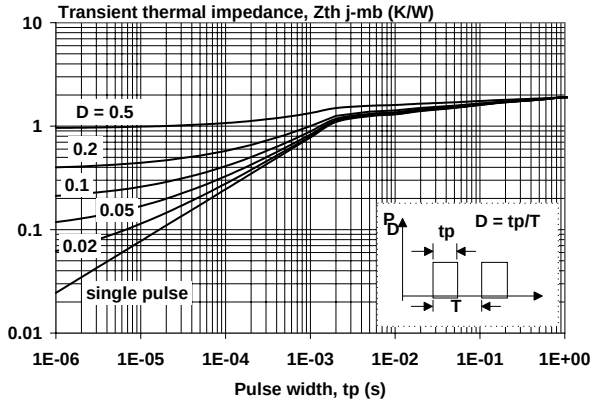

Fig.4. Transient thermal impedance.
$Z_{th\ j\text{-}mb} = f(t)$; parameter $D = t_p/T$

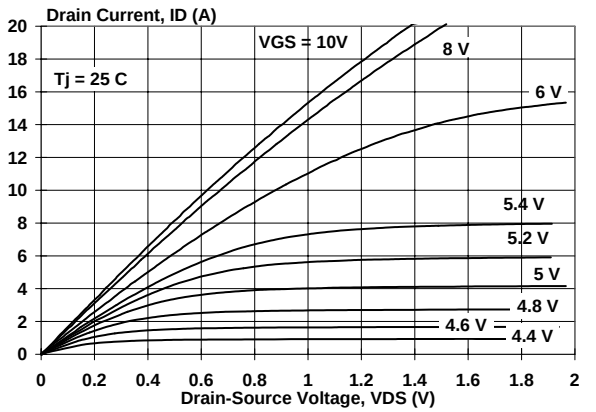

Fig.5. Typical output characteristics, $T_j = 25\ ^\circ C$.
$I_D = f(V_{DS})$

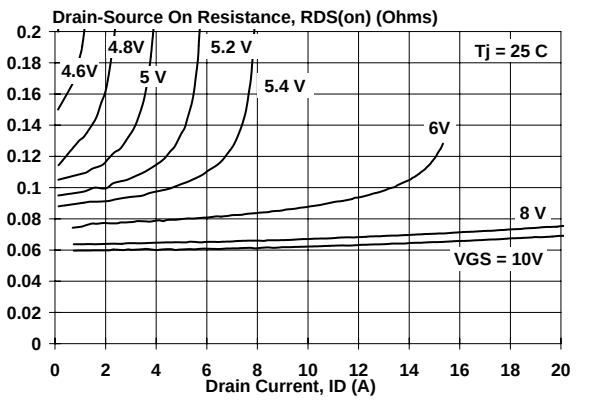

Fig.6. Typical on-state resistance, $T_j = 25\ ^\circ C$.
$R_{DS(ON)} = f(I_D)$

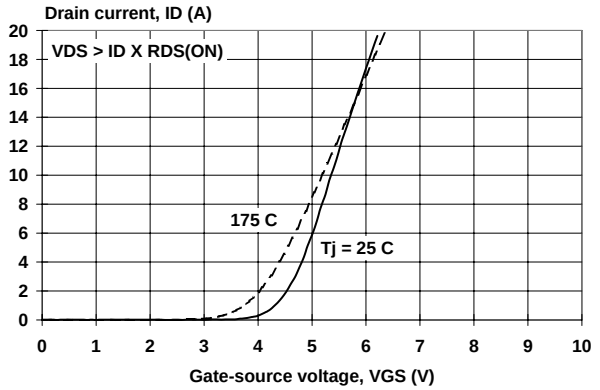

Fig.7. Typical transfer characteristics.
$I_D = f(V_{GS})$

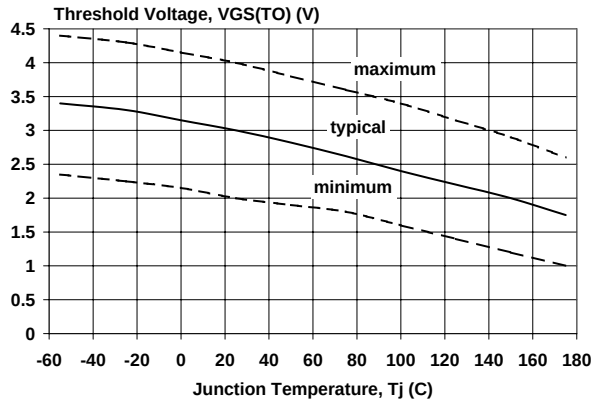

Fig.10. Gate threshold voltage.
$V_{GS(TO)} = f(T_j)$; conditions: I_D = 1 mA; $V_{DS} = V_{GS}$

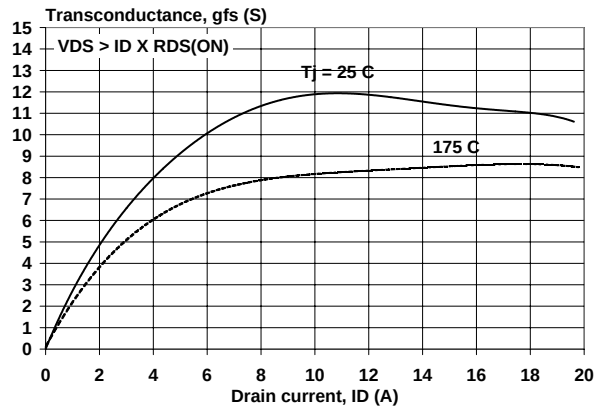

Fig.8. Typical transconductance, T_j = 25 ˚C.
$g_{fs} = f(I_D)$

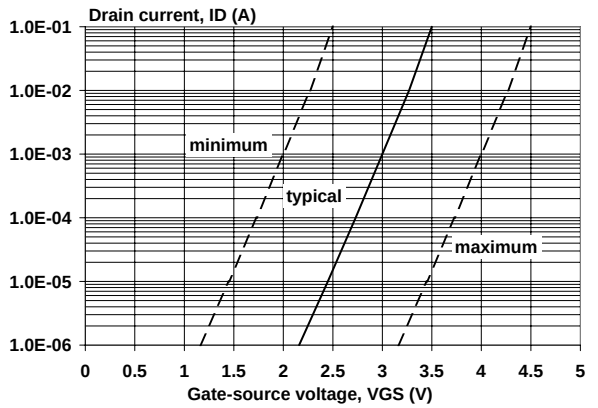

Fig.11. Sub-threshold drain current.
$I_D = f(V_{GS})$; conditions: T_j = 25 ˚C; $V_{DS} = V_{GS}$

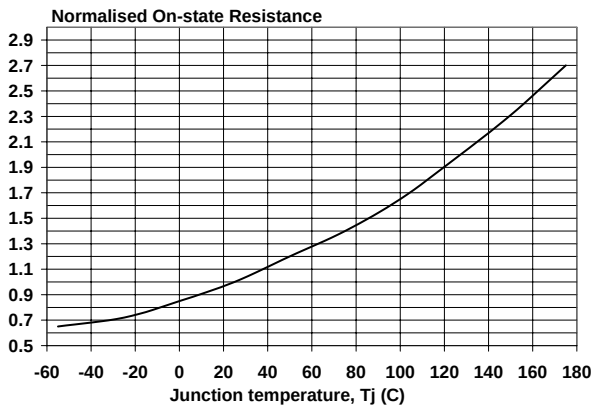

Fig.9. Normalised drain-source on-state resistance.
$R_{DS(ON)}/R_{DS(ON)25\,˚C} = f(T_j)$

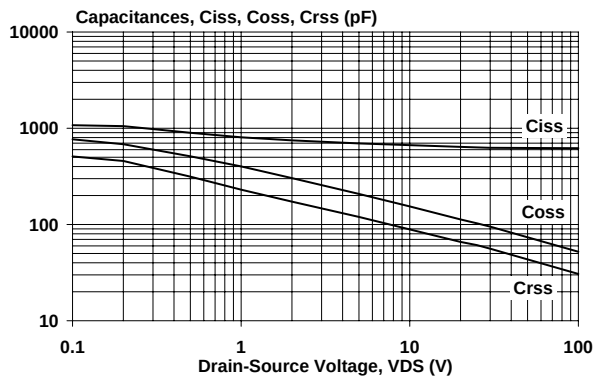

Fig.12. Typical capacitances, C_{iss}, C_{oss}, C_{rss}.
$C = f(V_{DS})$; conditions: V_{GS} = 0 V; f = 1 MHz

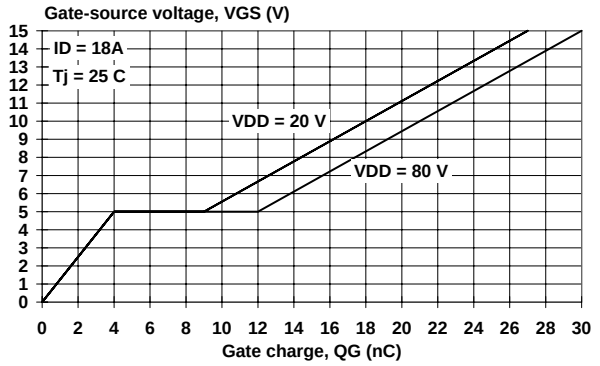

Fig.13. Typical turn-on gate-charge characteristics. $V_{GS} = f(Q_G)$

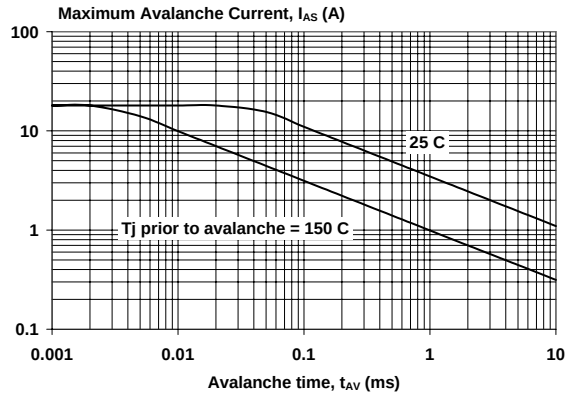

Fig.15. Maximum permissible non-repetitive avalanche current (I_{AS}) versus avalanche time (t_{AV}); unclamped inductive load

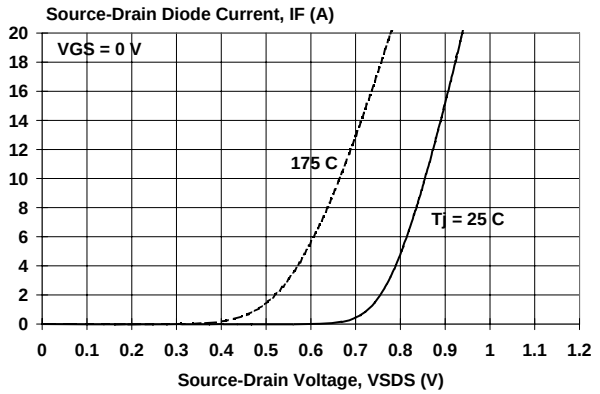

Fig.14. Typical reverse diode current. $I_F = f(V_{SDS})$; conditions: $V_{GS} = 0$ V; parameter T_j

MECHANICAL DATA

Plastic single-ended package; heatsink mounted; 1 mounting hole; 3-lead TO-220 **SOT78**

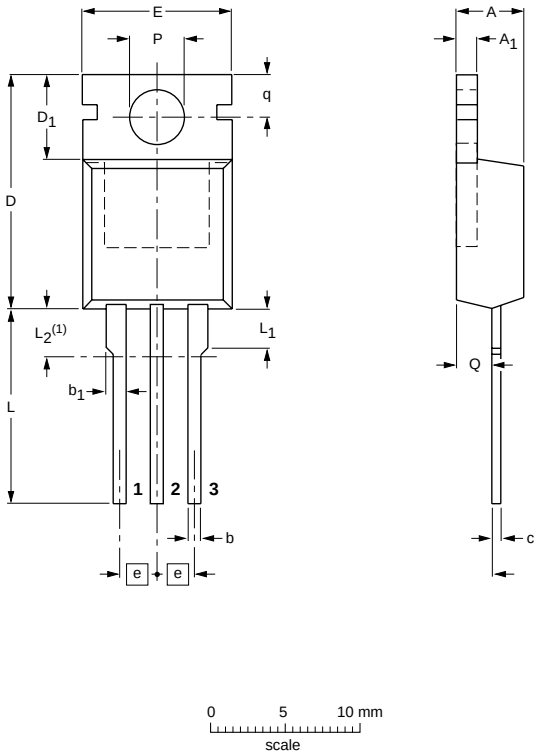

DIMENSIONS (mm are the original dimensions)

UNIT	A	A_1	b	b_1	c	D	D_1	E	e	L	L_1	L_2(1) max.	P	q	Q
mm	4.5 4.1	1.39 1.27	0.9 0.7	1.3 1.0	0.7 0.4	15.8 15.2	6.4 5.9	10.3 9.7	2.54	15.0 13.5	3.30 2.79	3.0	3.8 3.6	3.0 2.7	2.6 2.2

Note

1. Terminals in this zone are not tinned.

OUTLINE VERSION	REFERENCES				EUROPEAN PROJECTION	ISSUE DATE
	IEC	JEDEC	EIAJ			
SOT78		TO-220				97-06-11

Fig.16. SOT78 (TO220AB); pin 2 connected to mounting base (Net mass:2g)

Notes

1. This product is supplied in anti-static packaging. The gate-source input must be protected against static discharge during transport or handling.
2. Refer to mounting instructions for SOT78 (TO220AB) package.
3. Epoxy meets UL94 V0 at 1/8".

MECHANICAL DATA

Plastic single-ended surface mounted package (Philips version of D2-PAK); 3 leads (one lead cropped) **SOT404**

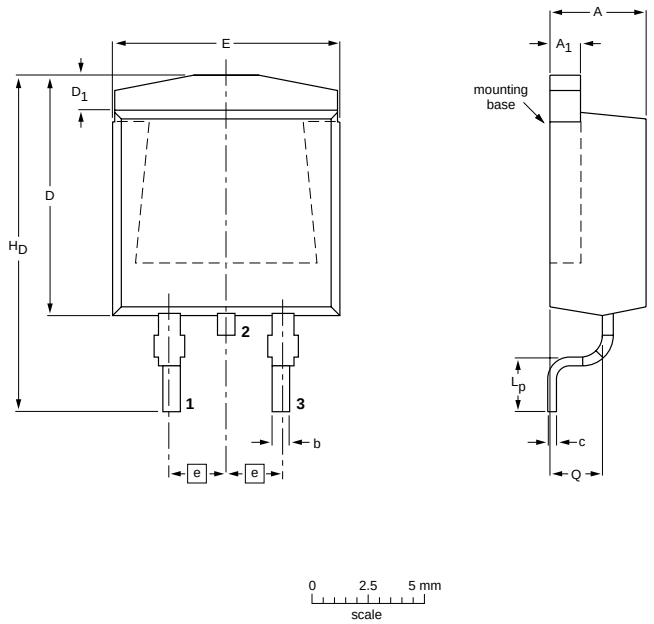

DIMENSIONS (mm are the original dimensions)

UNIT	A	A_1	b	c	D max.	D_1	E	e	L_p	H_D	Q
mm	4.50 4.10	1.40 1.27	0.85 0.60	0.64 0.46	11	1.60 1.20	10.30 9.70	2.54	2.90 2.10	15.40 14.80	2.60 2.20

OUTLINE VERSION	REFERENCES				EUROPEAN PROJECTION	ISSUE DATE
	IEC	JEDEC	EIAJ			
SOT404						~~98-12-14~~ 99-06-25

Fig.17. SOT404 surface mounting package. Centre pin connected to mounting base.

Notes

1. This product is supplied in anti-static packaging. The gate-source input must be protected against static discharge during transport or handling.
2. Refer to SMD Footprint Design and Soldering Guidelines, Data Handbook SC18.
3. Epoxy meets UL94 V0 at 1/8".

MOUNTING INSTRUCTIONS

Dimensions in mm

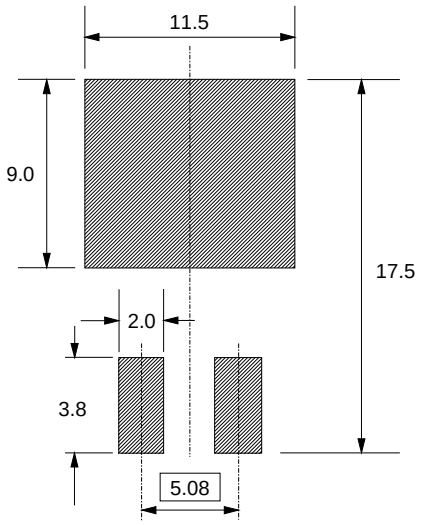

Fig.18. SOT404 : soldering pattern for surface mounting.

MECHANICAL DATA

Plastic single-ended surface mounted package (Philips version of D-PAK); 3 leads (one lead cropped) **SOT428**

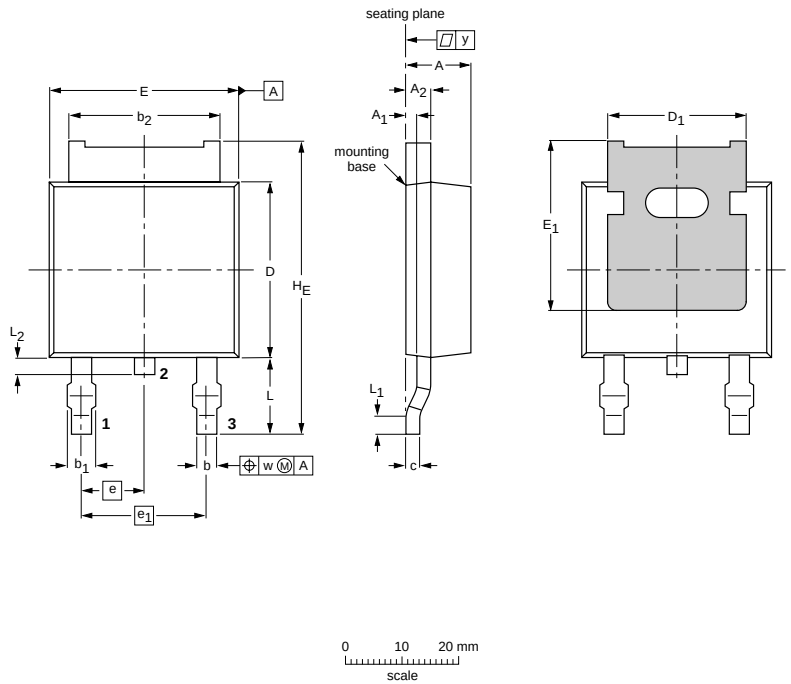

DIMENSIONS (mm are the original dimensions)

UNIT	A max.	A_1(1)	A_2	b	b_1 max.	b_2	c	D max.	D_1 max.	E max.	E_1 min.	e	e_1	H_E max.	L	L_1 min.	L_2	w	y max.
mm	2.38 2.22	0.65 0.45	0.89 0.71	0.89 0.71	1.1 0.9	5.36 5.26	0.4 0.2	6.22 5.98	4.81 4.45	6.73 6.47	4.0	2.285	4.57	10.4 9.6	2.95 2.55	0.5	0.7 0.5	0.2	0.2

Note

1. Measured from heatsink back to lead.

OUTLINE VERSION	REFERENCES				EUROPEAN PROJECTION	ISSUE DATE
	IEC	JEDEC	EIAJ			
SOT428						98-04-07

Fig.19. SOT428 surface mounting package. Centre pin connected to mounting base.

Notes

1. This product is supplied in anti-static packaging. The gate-source input must be protected against static discharge during transport or handling.
2. Refer to SMD Footprint Design and Soldering Guidelines, Data Handbook SC18.
3. Epoxy meets UL94 V0 at 1/8".

MOUNTING INSTRUCTIONS

Dimensions in mm

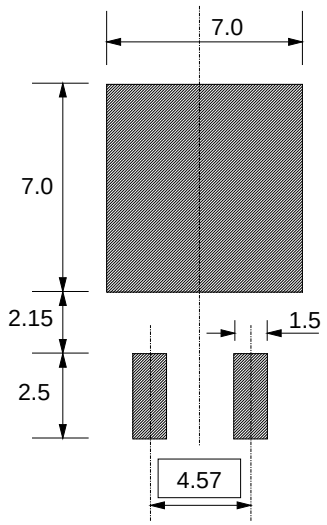

Fig.20. SOT428 : soldering pattern for surface mounting.

DEFINITIONS

Data sheet status	
Objective specification	This data sheet contains target or goal specifications for product development.
Preliminary specification	This data sheet contains preliminary data; supplementary data may be published later.
Product specification	This data sheet contains final product specifications.
Limiting values	
Limiting values are given in accordance with the Absolute Maximum Rating System (IEC 134). Stress above one or more of the limiting values may cause permanent damage to the device. These are stress ratings only and operation of the device at these or at any other conditions above those given in the Characteristics sections of this specification is not implied. Exposure to limiting values for extended periods may affect device reliability.	
Application information	
Where application information is given, it is advisory and does not form part of the specification.	
© **Philips Electronics N.V. 1999**	
All rights are reserved. Reproduction in whole or in part is prohibited without the prior written consent of the copyright owner.	
The information presented in this document does not form part of any quotation or contract, it is believed to be accurate and reliable and may be changed without notice. No liability will be accepted by the publisher for any consequence of its use. Publication thereof does not convey nor imply any license under patent or other industrial or intellectual property rights.	

LIFE SUPPORT APPLICATIONS

These products are not designed for use in life support appliances, devices or systems where malfunction of these products can be reasonably expected to result in personal injury. Philips customers using or selling these products for use in such applications do so at their own risk and agree to fully indemnify Philips for any damages resulting from such improper use or sale.